Automated Extraction of Scenario Sequences from Disciplined Dataflow Networks

Firew Siyoum[1], Marc Geilen[1], Johan Eker[2], Carl von Platen[3] and Henk Corporaal[1]

[1]Eindhoven University of Technology, The Netherlands
[2]Ericsson, Lund, Sweden
[3]ARM, Lund, Sweden

MEMOCODE 2013, Portland, Oregon

Technische Universiteit
Eindhoven
University of Technology

Where innovation starts

October 18, 2013

Embedded Streaming Applications

- Modern multimedia and wireless systems are stream processing applications.
- E.g. audio and video encoders/decoders, WLAN IEEE 802.11x, WCDMA and LTE.

Embedded Streaming Applications

- Modern multimedia and wireless systems are stream processing applications.
- E.g. audio and video encoders/decoders, WLAN IEEE 802.11x, WCDMA and LTE.

Design-time Analysis

- Analysing deadlock-freedom and buffer boundedness is crucial.
- They also have real-time temporal constrains such as throughput.

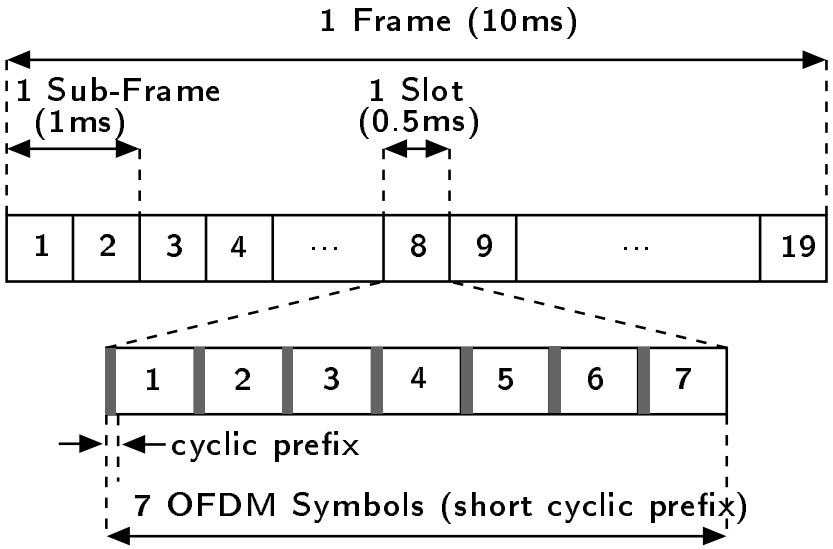

Figure:LTE frame structure

Analysis Challenge

- Applications are partitioned into a set of tasks that run in parallel on a MPSoC.

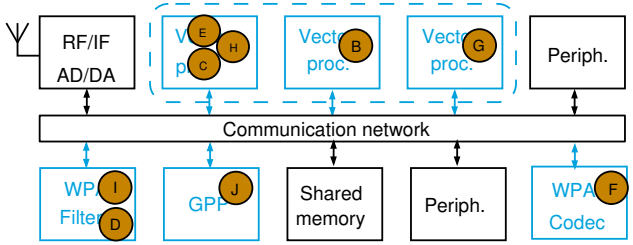

Communicating tasks

- Tasks are data-dependent and state-dependent.

```
Task A
InputPort i, j
OutputPort o

Firing 1:
 readFromPort(i)
 doSomething()


Firing 2:
  readFromPort(j)
  doAnotherThing()
  writeToPort(o)
```

```
Task B
InputPort i
OutputPort o

Firing 1: if bitand(i,1) != 0
 readFromPort(i)
 doSomething()
 writeToPort(o)

Firing 2: if bitand(i,2) != 0
 readFromPort(i)
 doAnotherThing()
 writeToPort(o)
```

Synchronous Dataflow (SDF)

- consists of actors that communicate tokens through FIFO channels.
- Actors have fixed port rates and execution durations.

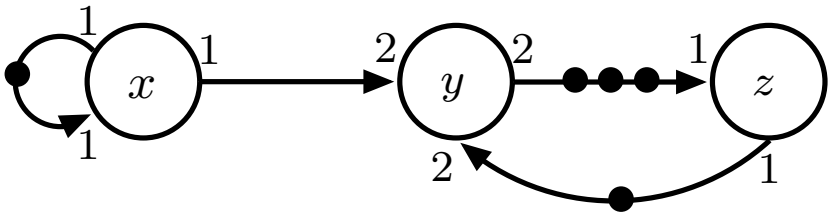

$$A = \{x, y, z\}$$
$$C = \{c_{xx}, c_{xy}, c_{yz}, c_{zy}\}$$
$$\mathcal{X}(x) = 2, \mathcal{X}(y) = 3, \mathcal{X}(z) = 2$$

- Repetition vector: the number of firings of each actor that brings the graph back to its original state. e.g $[x, y, z] = [2, 1, 2]$

Synchronous Dataflow (SDF)

- consists of actors that communicate tokens through FIFO channels.
- Actors have fixed port rates and execution durations.

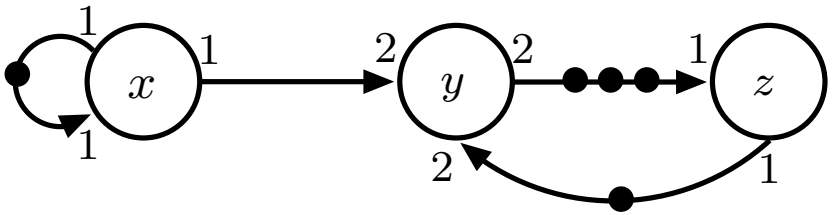

$$A = \{x, y, z\}$$
$$C = \{c_{xx}, c_{xy}, c_{yz}, c_{zy}\}$$
$$\mathcal{X}(x) = 2, \mathcal{X}(y) = 3, \mathcal{X}(z) = 2$$

- Repetition vector: the number of firings of each actor that brings the graph back to its original state. e.g $[x, y, z] = [2, 1, 2]$

Limitation of SDF

- is not expressive enough to capture dynamic behavior.

Scenario-aware Dataflow (SADF)

- A scenario is a single mode of operation and is modeled by a SDF.
- A FSM encodes the possible sequences of scenarios.

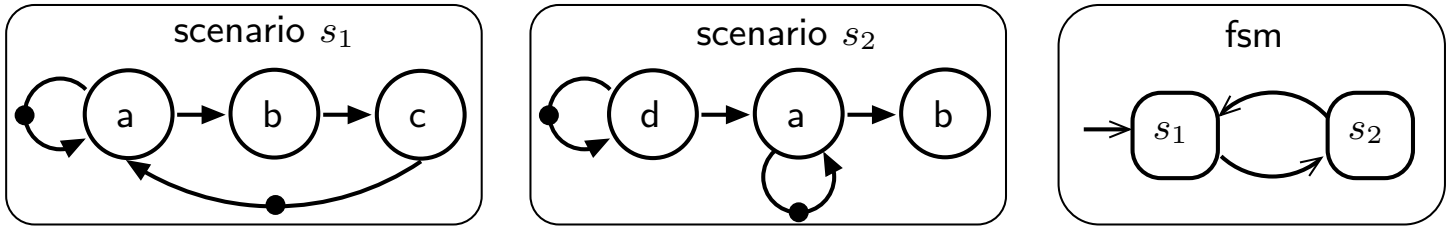

- a more accurate analysis than SDF. e.g. $> 60\%$ in resource saving

Scenario-aware Dataflow (SADF)

- A scenario is a single mode of operation and is modeled by a SDF.
- A FSM encodes the possible sequences of scenarios.

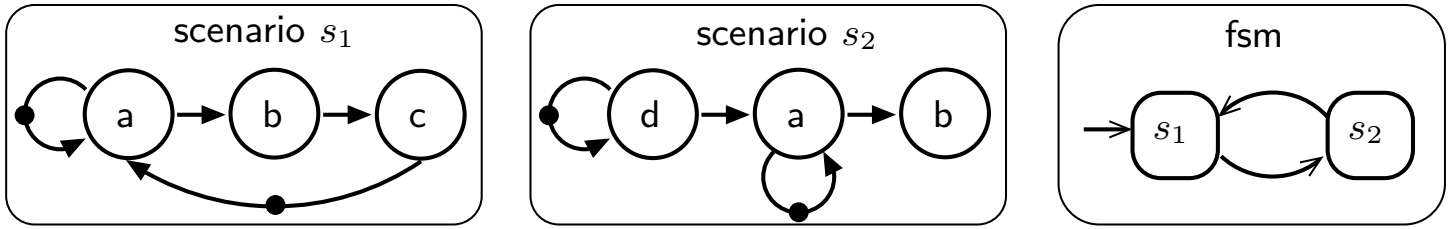

- a more accurate analysis than SDF. e.g. $> 60\%$ in resource saving

Limitation of FSM-SADF

- model construction is challenged by large number of scenarios.
- manual construction is time-consuming and error-prone.

We propose

Disciplined Dataflow Network

- is a network of actors that communicate through FIFO connections.
- is defines certain construction rules for parallel dataflow programs.

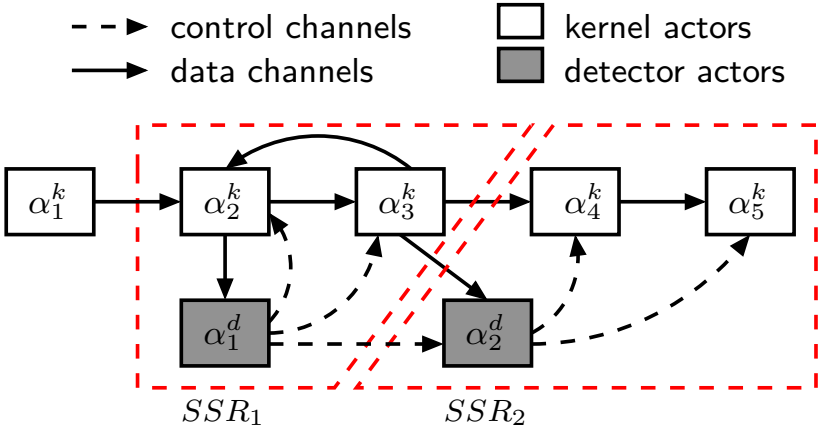

We propose

Disciplined Dataflow Network

- is a network of actors that communicate through FIFO connections.
- is defines certain construction rules for parallel dataflow programs.

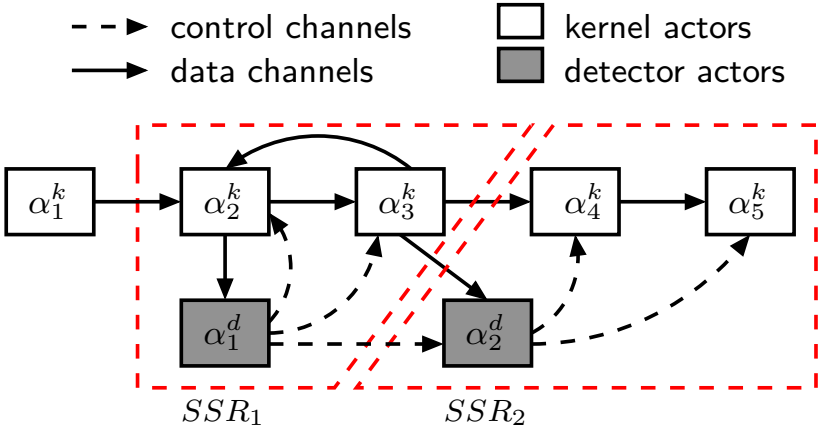

Objectives of DDN

1. automatically test if a dataflow program complies with these rules
2. automatically extract a FSM-based SADF model if it complies

We propose

Disciplined Dataflow Network

- defines rules that restrict state and data dependencies of actors.
- is constructed from two types of actors: detectors and kernels.

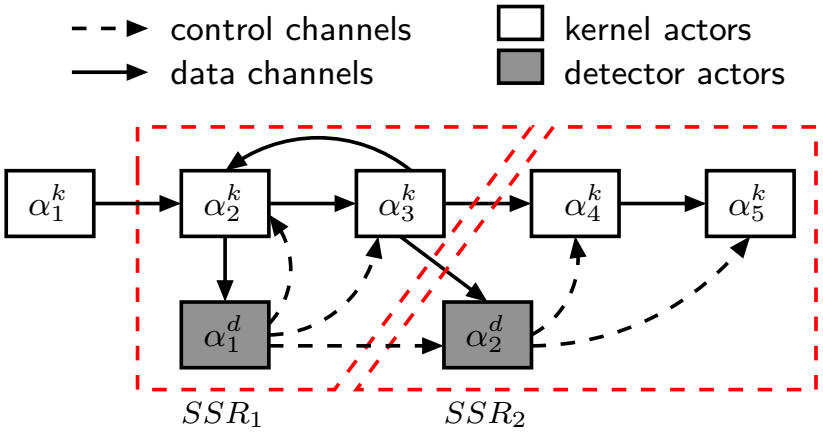

- Detectors are controllers and kernels are followers.
- A detector can control multiple kernels.
- A kernel is controlled by at most one detector.
- A detector and the set of kernels it controls form a SSR.

Kernel Actor

- has a set of firings and each firing has a DDN firing rule.
  - DDN firing rules are integer constraints.
  - DDN firing rules are complete.
- Completeness guarantees termination-free execution.

```
actor ExampleKernel()
  InputPort i, j
  OutputPort o

  Firing 1: if (i > 2 and j < 5) //firing rule 1
    doSomething ...

  Firing 2: if (i <= 2 and 5 <= j < 10) //firing rule 2
    doAnotherThing ...

  Firing 3: if (j >= 10) //firing rule 3
    doNothing ...

end
```

Detector Actor

- Firing rules do not have to be DDN firing rules.
- Output tokens are of type integer and take values from a finite set.
- Each firing produces a set of control tokens.

```
actor ExampleDetector()
  InputPort i,
  OutputPort o

  Firing 1: if foo(i) > 0 // produce control token 0
    doSomething ...
    writeToOutputPort(0)

  Firing 2: if i > 0 //produce control tokens 1 to 5
    doAnotherThing ...
    x := pick from 1 to 5
    writeToOutputPort(x)
end
```

Scenario Extraction

Scenario configuration

- A single firing of a detector defines a scenario of the SSR.
- Thus, a tuple of firings, one from each detector of the DDN, determines a scenario of the whole network.
- such a tuple is called a scenario configuration.

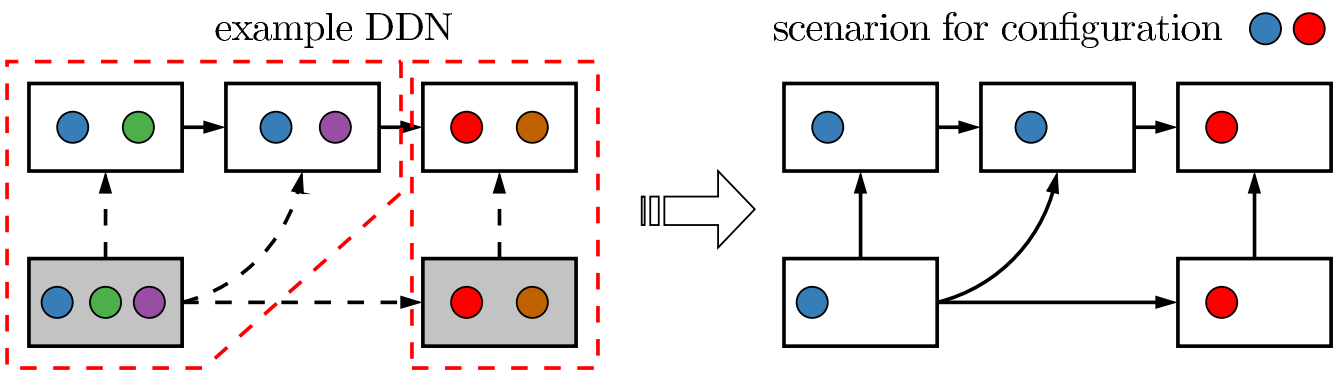

Configuration-space Exploration

- Extracting configurations using the Cartesian product is pessimistic.
- We extract scenario configurations more accurately from local FSMs of detectors, through configuration-space exploration.

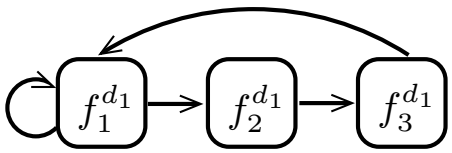

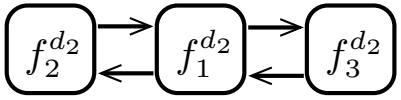

Configuration-space Exploration

- Extracting configurations using the Cartesian product is pessimistic.
- We extract scenario configurations more accurately from local FSMs of detectors, through configuration-space exploration.

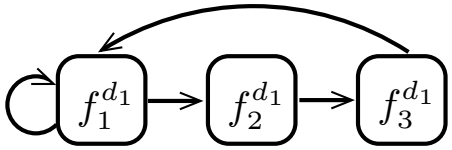

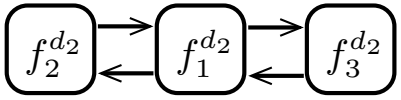

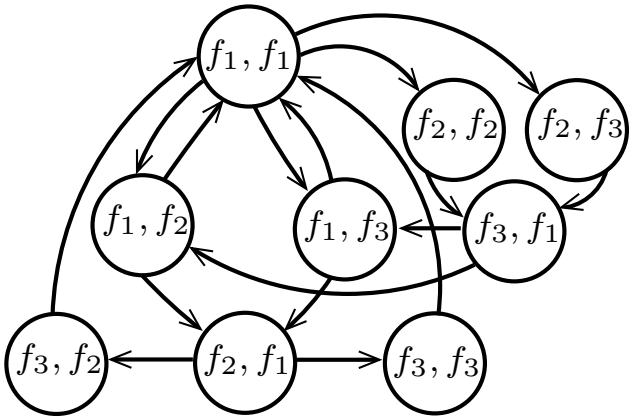

Complete Space

Configuration-space Exploration

- Extracting configurations using the Cartesian product is pessimistic.
- We extract scenario configurations more accurately from local FSMs of detectors, through configuration-space exploration.

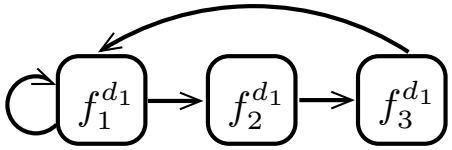

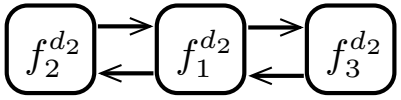

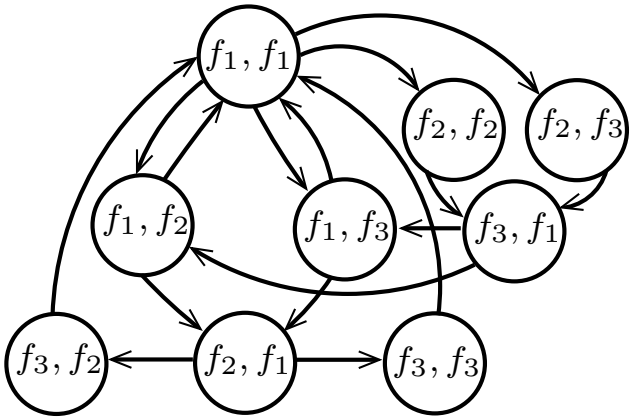

Complete Space

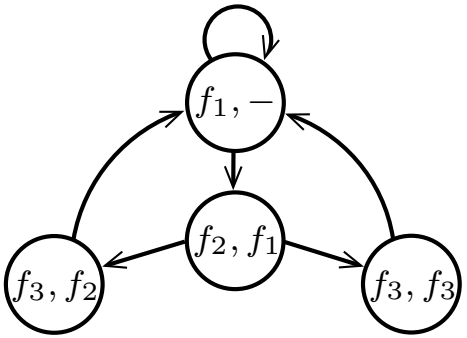

Simplified Space

Extraction framework

- The approach is demonstrated for the CAL actor language.
- CAL is employed by the ISO/IEC standardization for the Reconfigurable Video Coding (RVC) MPEG standard.

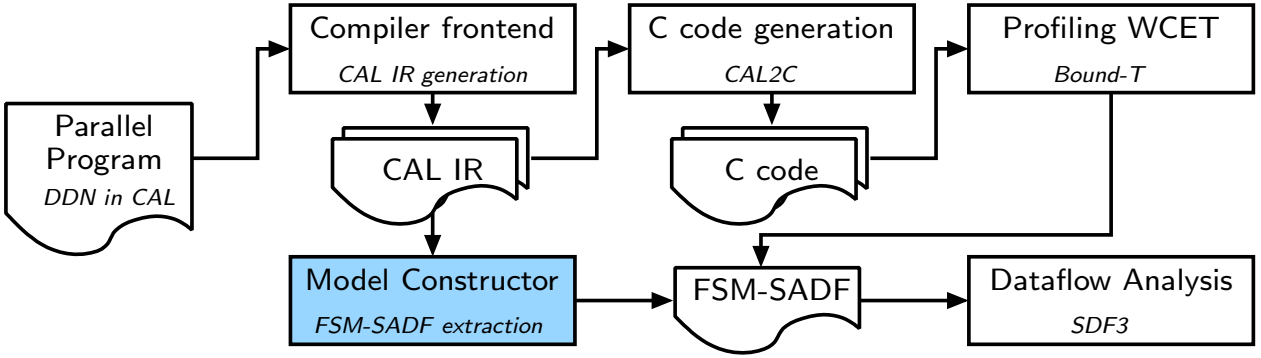

WLAN 802.11a Baseband Processing

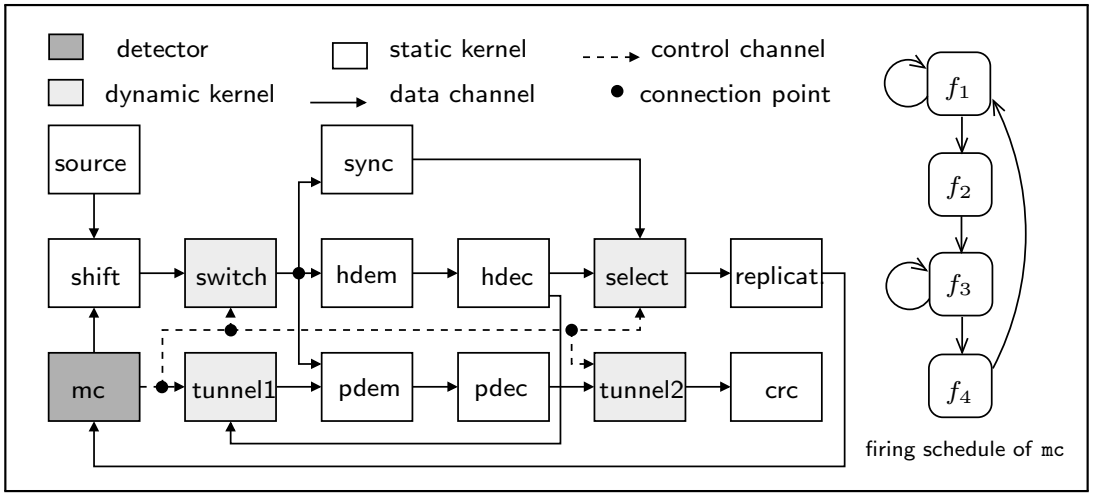

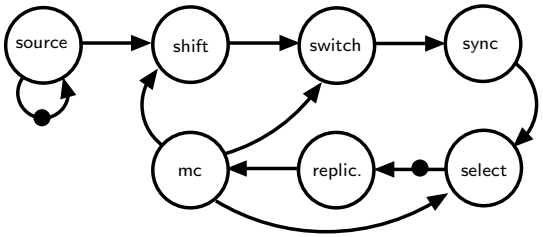

Extracted WLAN Scenario

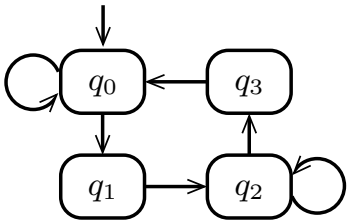

$$\Psi(q_0) = s_1$$
$$\Psi(q_1) = s_2$$
$$\Psi(q_2) = s_3$$
$$\Psi(q_3) = s_4$$

Extracted FSM

RVC-MPEG4 SP Video Decoder

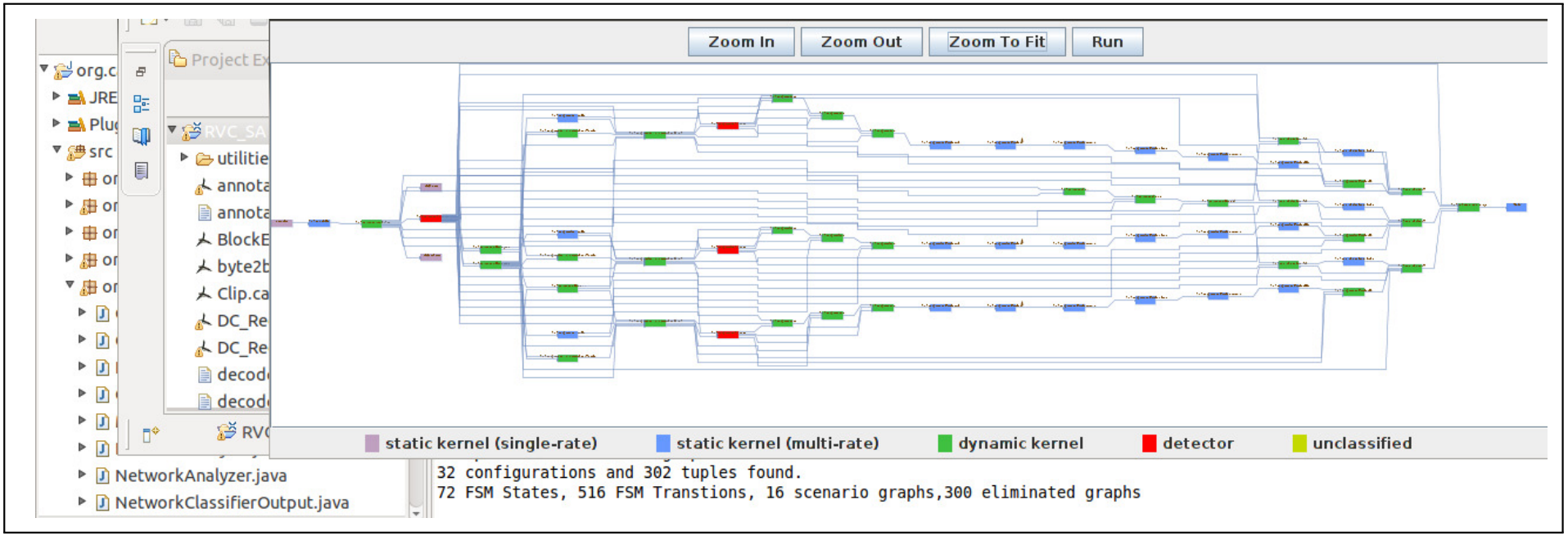

Case-study

RVC-MPEG4 SP Video Decoder

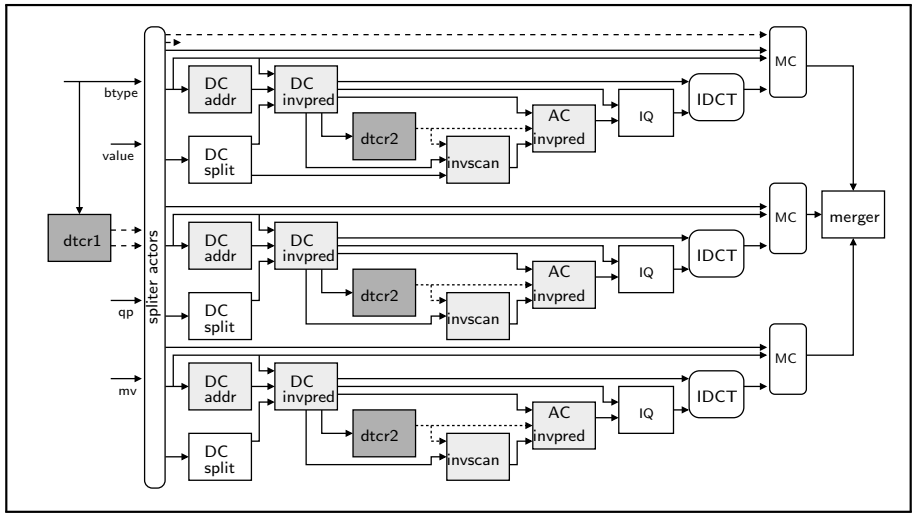

Extracted Scenario

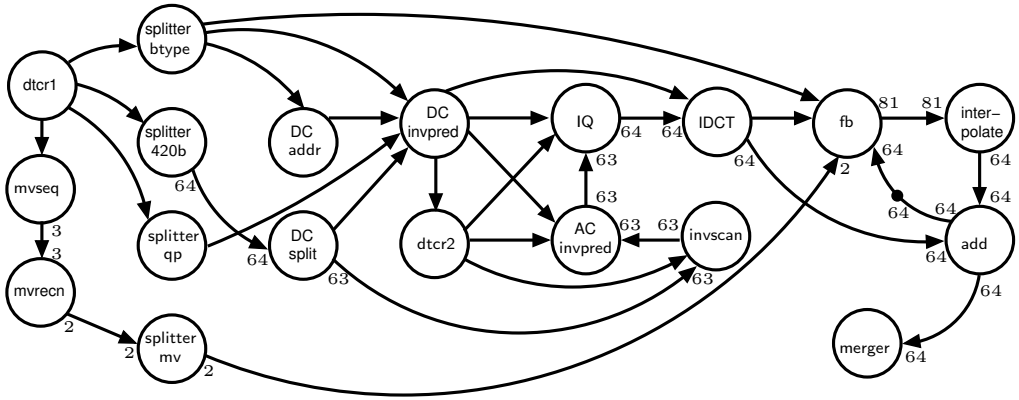

Case-study

Analysis

- Deadlock-freedom and boundedness: each scenario sequence
- Timing Analysis: we mapped the extracted scenarios onto a multi-core platform model and analysed the worst-case throughputs.

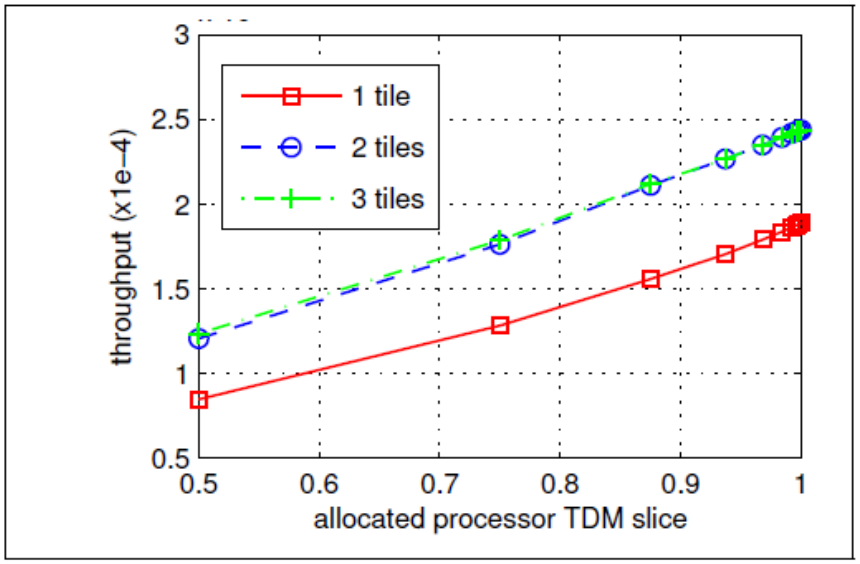

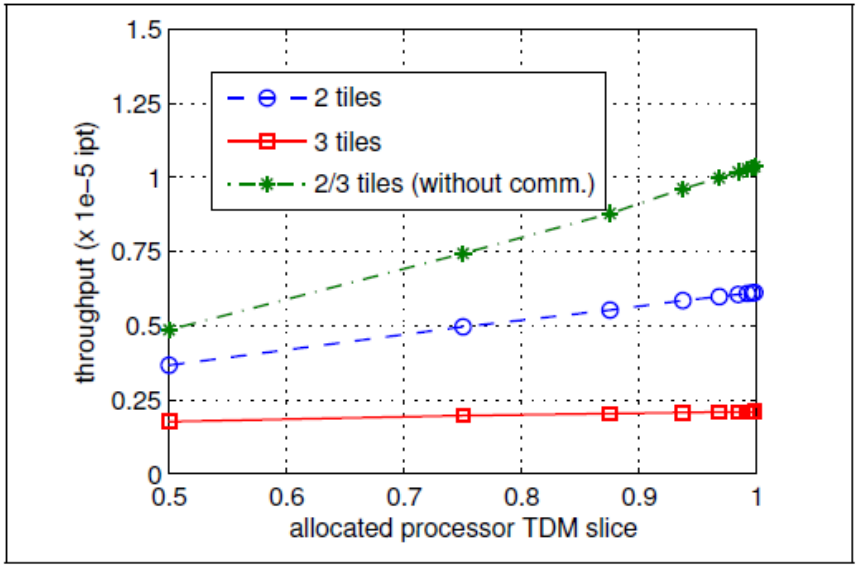

Conclusions

Disciplined Dataflow Networks

- is an analysable programming model for dynamic streaming applications.
  1. guarantees a scenario-based analysis model can always be constructed.
  2. guarantees the process of constructing the model can be automated.

Conclusions

Disciplined Dataflow Networks

- is an analysable programming model for dynamic streaming applications.
  1. guarantees a scenario-based analysis model can always be constructed.
  2. guarantees the process of constructing the model can be automated.

- Caltoopia - http://www.github.com/caltoopia
- SDF3 - http://www.es.ele.tue.nl/sdf3
- Analysis - Worst-case throughput analysis of dynamic streaming applications, in proc. CODES+ISSS 2012

Conclusions

Disciplined Dataflow Networks

- is an analysable programming model for dynamic streaming applications.
  1. guarantees a scenario-based analysis model can always be constructed.
  2. guarantees the process of constructing the model can be automated.

- Caltoopia - http://www.github.com/caltoopia
- SDF3 - http://www.es.ele.tue.nl/sdf3
- Analysis - Worst-case throughput analysis of dynamic streaming applications, in proc. CODES+ISSS 2012

Thank you!

Questions?